TP TPMCQD1-A PT100 - Temperature Relay

- TEMPERATURE PROTECTION RELAY WITH PT100 SENSOR
- EXTERNAL LATCHING SELECTABLE
- SENSOR TEST CONNECTION
- OUTPUT RELAY 1 POLE CHANGEOVER CONTACT
- COMPACT SIZE - 1 MODULE - 17.5mm
- DIN RAIL MOUNTING EN50.022
- SELF-EXTINGUISHED MATERIAL UL94 V0

■ TYPICAL APPLICATION: TEMPERATURE MONITOR

EU Directives - CE Marking:

> 2014/30/UE - EMC
> 2014/35/UE - LVD

TECHNICAL DATA

INPUT	UNIT	TPMCQD1-A
Supply voltage DC ±10%	V⎓	22 - 39
Supply voltage AC ±10%	V~	19 - 28
Nominal Frequency	Hz	50 - 60 (range: 47 - 63)
Power consumption (max. AC)	VA	1.3
Supply indication (U)	-	Green LED
MEASURING CIRCUIT		
Type of sensor	-	PT100
Temperature Levels	°C	50 - 149
Precision	°C	± 2
OUTPUT RELAY		
Rating	-	8A - 250V~/24V⎓
Max switching power	VA	2000
Max switching voltage	V~	400
Min switching load	-	10mA 12V⎓
Contact life	Mech. Electr.	30 x 10^3 ops 100 x 10^3 ops
Changeover contacts	-	AgNi0.15
Output Indication (R)	-	Red LED
GENERAL		
Delay Time (T)	s	1 - 60
Working temperature	°C	-20 / +50
Storage temperature	°C	-30/+70
Electrical Insulation (supply/probe)	kV	3
Electrical Insulation (supply/relay)	kV	4
Overvoltage Category	-	III
Protection degree	IP	20
Pollution degree	-	2
Climatic category according to (without condensation)	-	IEC 60068-1 (20/050/60) DIN 40040 (class D)
Altitude up to	m	2000
Weight	g	70
Dimensions	mm	98 x 17.5 x 64

FUNCTIONS

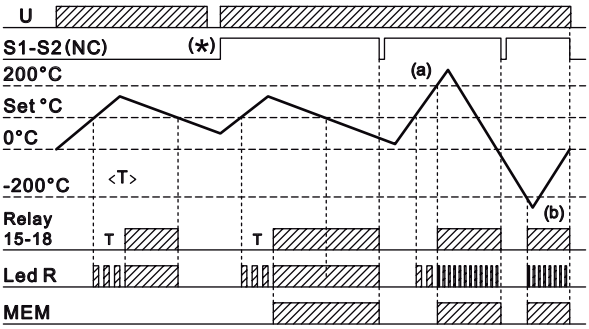

(*) - To activate the "MEM", the device needs to be restarted
(a) - Short Circuit (b) - Open Circuit

DESCRIPTION

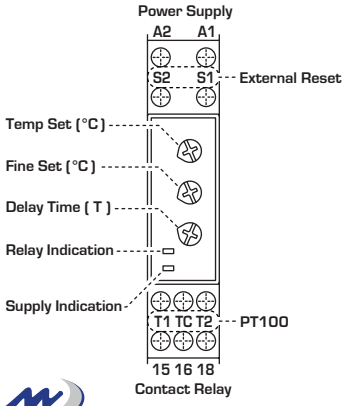

DIMENSIONS (mm)

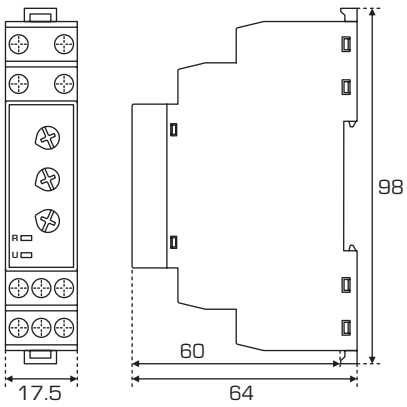
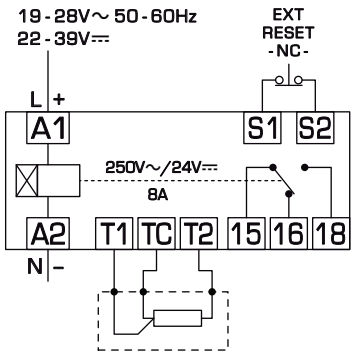
WIRING DIAGRAM